MtronPTI
...when timing matters

1703 E. Highway 50 Yankton, SD 57078 USA
Phone: 800-762-8800 or 605-665-9321 Fax: 605-665-1709
Website: www.mtronpti.com

SPECIFICATION FOR RoHS 6 COMPLIANT SMT TCXO
MtronPTI P/N M6164S018

Electrical Specifications:

Parameter	Symbol	Min.	Typ.	Max.	Units	Conditions
Frequency of Operation	F_O		10.000000		MHz	
Frequency Tolerance		-1.0		+1.0	ppm	@ +25°C
	Frequency Stabilities					
vs Temperature	$\Delta F/F$			0.5	ppm	$(F_{MAX}-F_{MIN})/2$ Over operating temperature range
vs Aging		-1.0		+1.0	ppm	1st year
Frequency vs. Supply	F_{VS}		± 0.02	± 0.1	ppm	For 5% voltage change
Frequency vs. Load	F_L		± 0.02	± 0.1	ppm	For 5% load change
	Output					
Output Type		HCMOS Compatible				
Output Load				15	pF	
Symmetry (duty cycle)	T_{DC}	40	50	60	%	@ 50% of VDD
Output Logic Levels	V_{OL}			20	% V_{CC}	
Output Level	V_{OH}	80			% V_{CC}	
Rise/Fall Time				6.5	nS	Ref. 10% and 90%
Tri-state Function		Logic "1", or floating, output Enabled. Logic "0", output Disabled.				Pad 8
Start-up Time	T_{SU}			10	mS	
	Additional Specifications					
SSB Phase Noise (Under Static Conditions)			-100		dBc/Hz	@ 10Hz Offset
			-128			@ 100Hz Offset
			-148			@ 1kHz Offset
			-155			@ 10kHz Offset
			-156			@ 100kHz Offset
			-157			@ 1MHz Offset
G-sensitivity			0.6		ppb/g	
	Supply Voltage & Power Consumption					
Operating Voltage	V_{DD}	3.135	3.3	3.465	V_{DC}	
Operating Current	I_{DD}			5	*mA*	

Environmental & Mechanical Requirements:

Operating Temperature	T_A	-40		+85	°C	
Storage Temperature	T_S	-55		+125	°C	
Mechanical Shock	Per MIL-STD-202, Method 213, Condition C (100 g's, 6 ms duration, ½ sine wave)					
Vibration	Per MIL-STD-202, Method 201 & 204 (10 g's from 10-2000 Hz)					
Solderability	Per MIL-STD-202, Method 208, except steam aging is not required					
Max. Soldering Conditions	See solder profile, Figure 1					
Package Type	5.0 x 7.0 x 1.6mm, 10-pad Ceramic Leadless Chip Carrier. RoHS Compliant.					

1703 E. Highway 50 Yankton, SD 57078 USA
Phone: 800-762-8800 or 605-665-9321 Fax: 605-665-1709
Website: www.mtronpti.com

SPECIFICATION FOR RoHS 6 COMPLIANT SMT TCXO
MtronPTI P/N M6164S018

Mechanical, Marking and Layout Information:

Pad	Function
1	N/C
2	N/C
3	N/C
4	Ground/Case
5	Output
6	N/C
7	N/C
8	Tristate
9	$+V_{DD}$
10	N/C

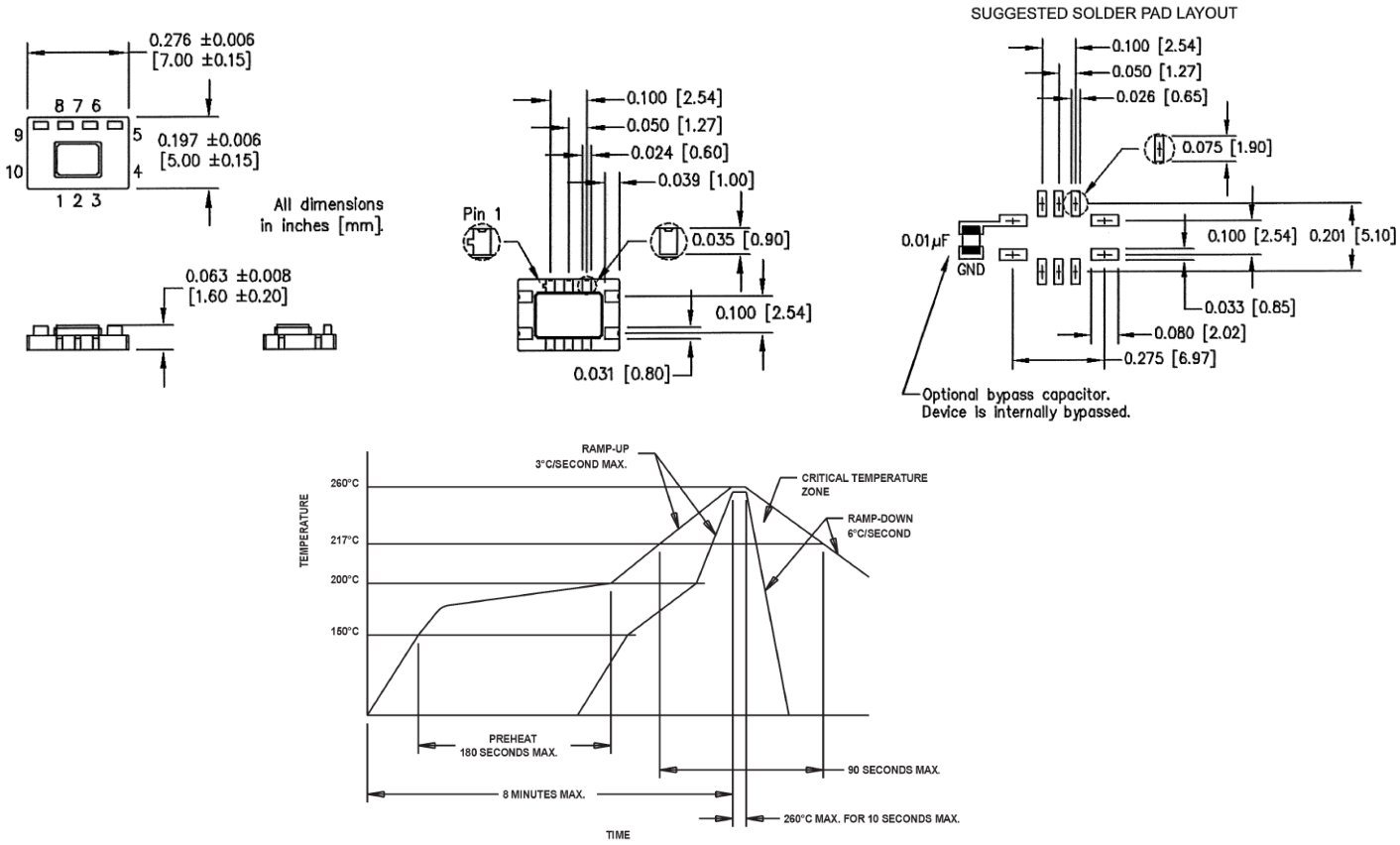

Figure 1

Data Sheet Revision Table:

Date	Rev.	Author	Details of Revision
08/01/14	0	MM	Original Release.